Bell suction cup (round)

SVE 53 PU-55 G3/8-AG

Part no..:10.01.19.00257

https://www.schmalz.com/10.01.19.00257

Home > Vacuum Technology for Automation > Vacuum Components > Vacuum Suction Cups > Suction Cups for the Packaging Industry > Bin-Picking Suction Cups SVE > SVE 53 PU-55 G3/8-AG

Suction cup f. bin-picking processes with optimum adaptation to a wide range of workpieces

Size: 53
Suction cup material: Polyurethane PU
Material hardness [Shore A]: 55 Shore A
Thread G1: G3/8"-M

Design Data

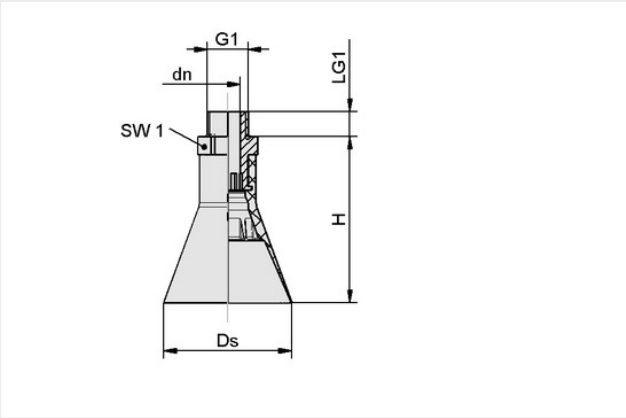

Attribute	Value
dn	10.30 mm
Ds	52.10 mm
G1	G3/8"-M
H	68 mm
LG1	10 mm
SW1	22 mm

Technical Data

Attribute	Value
Suction cup material	Polyurethane PU
Material hardness [Shore A]	55 Shore A
Size	53
Product family	SVE

Contact Schmalz
Schmalz Australia Pty Ltd | 25 Turbo Drive, Bayswater North, VIC, 3153 Melbourne, Australia | +61 3 9215 8800 | schmalz@schmalz.com.au

Bell suction cup (round)

SVE 53 PU-55 G3/8-AG

Part no..:10.01.19.00257

https://www.schmalz.com/10.01.19.00257

Spare parts

SVE 53 PU-55 SC080

Part no..:10.01.19.00248

Size: 53
Suction cup material: Polyurethane PU
Material hardness [Shore A]: 55 Shore A
Nipple family: SC 080

SC 080 G3/8-AG

Part no..:10.01.06.02593

Connection geometry: 080
Vacuum connection: G3/8"-M
Length L1: 32 mm
Fitting length: 7.5 mm
Nominal diameter dn: 10.3 mm

Contact Schmalz
Schmalz Australia Pty Ltd | 25 Turbo Drive, Bayswater North, VIC, 3153 Melbourne, Australia | +61 3 9215 8800 | schmalz@schmalz.com.au