Flat suction cup (round)

SUF 18 SI-CO-55 G1/8-AG

Part no..:10.01.01.14138

https://www.schmalz.com/10.01.01.14138

Home > Vacuum Technology for Automation > Vacuum Components > Vacuum Suction Cups > Flat Suction Cups (Round) > Flat Suction Cups SUF > SUF 18 SI-CO-55 G1/8-AG

Flat suction cup (round) for process safe handling of smooth or slightly rough surfaces

Size: 18
Suction cup material: Silicone SI conductive
Material hardness [Shore A]: 55 Shore A
Vacuum connection: G1/8"-M

Design Data

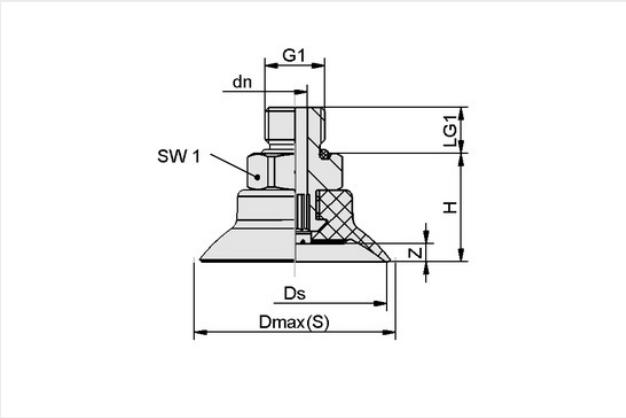

Attribute	Value
Dmax(S)	20.60 mm
Ds	18 mm
dn	3.10 mm
G1	G1/8"-M
H	15.30 mm
LG1	7.50 mm
SW1	14 mm
Z (Stroke)	1.80 mm

Technical Data

Attribute	Value
Suction force (-600mbar)	13 N
Pull-off force	13 N
Volume	0.37 cm³
Curve radius (min) (convex)	20 mm
Hose diameter (rec.) d	4 mm
Size	18
Suction cup material	Silicone SI conductive
Material hardness [Shore A]	55 Shore A

Contact Schmalz
Schmalz GmbH | Eigentalstr. 1, 8309 Nürensdorf, Switzerland | +41 44 555 05 05 | schmalz@schmalz.ch

Flat suction cup (round)

SUF 18 SI-CO-55 G1/8-AG

Part no..:10.01.01.14138

https://www.schmalz.com/10.01.01.14138

Weight	5.10 g
Product family	SUF
Number of folds	0

Note: Suction force: The specified suction forces are theoretical values at a vacuum of -0.6 bar and with a dry, smooth and flat workpiece surface - they do not include a safety factor Hose diameter: The recommended hose diameter refers to a hose length of approx. 2 m

Spare parts

SC 030 G1/8-AG

Part no..:10.01.06.04288

Connection geometry: 030	
Vacuum connection: G1/8"-M	
Fitting length: 6 mm	
Nominal diameter dn: 3.1 mm	

SUF 18 SI-CO-55 SC030

Part no..:10.01.01.14035

Size: 18	
Suction cup material: Silicone SI conductive	
Material hardness [Shore A]: 55 Shore A	

Contact Schmalz

Schmalz GmbH | Eigentalstr. 1, 8309 Nürensdorf, Switzerland | +41 44 555 05 05 | schmalz@schmalz.ch