Flat suction cup (round)

SUF 20 NBR-55 G1/8-IG

Part no..:10.01.01.14119

https://www.schmalz.com/10.01.01.14119

Home > Vacuum Technology for Automation > Vacuum Components > Vacuum Suction Cups > Flat Suction Cups (Round) > Flat Suction Cups SUF > SUF 20 NBR-55 G1/8-IG

Flat suction cup (round) for process safe handling of smooth or slightly rough surfaces

Size: 20
Suction cup material: Nitrile rubber NBR
Material hardness [Shore A]: 55 Shore A
Vacuum connection: G1/8"-F

Design Data

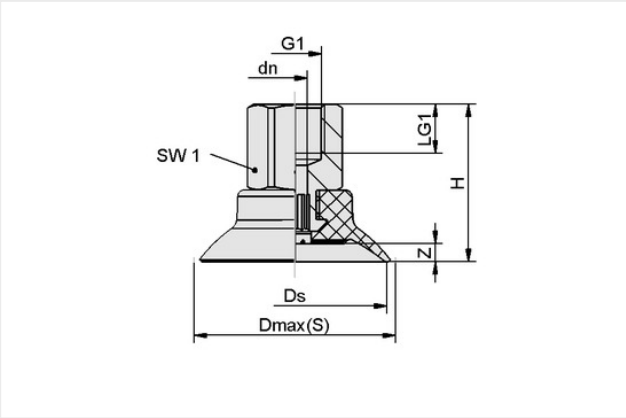

Attribute	Value
Dmax(S)	22.80 mm
Ds	20 mm
dn	3.10 mm
G1	G1/8"-F
H	23.50 mm
LG1	8 mm
SW1	14 mm
Z (Stroke)	2 mm

Technical Data

Attribute	Value
Suction force (-600mbar)	15 N
Pull-off force	15 N
Volume	0.50 cm³
Curve radius (min) (convex)	20 mm
Hose diameter (rec.) d	4 mm
Size	20
Suction cup material	Nitrile rubber NBR
Material hardness [Shore A]	55 Shore A

Contact Schmalz
J. Schmalz GmbH | Johannes-Schmalz-Str.1, 72293 Glatten, Germany | +49 7443 2403-105 | kundencenter@schmalz.de

Flat suction cup (round)

SUF 20 NBR-55 G1/8-IG

Part no..:10.01.01.14119

https://www.schmalz.com/10.01.01.14119

Weight	6.50 g
Product family	SUF
Number of folds	0

Note: Suction force: The specified suction forces are theoretical values at a vacuum of -0.6 bar and with a dry, smooth and flat workpiece surface - they do not include a safety factor Hose diameter: The recommended hose diameter refers to a hose length of approx. 2 m

Spare parts

SC 030 G1/8-IG

Part no..:10.01.06.04307

Connection geometry: 030
Vacuum connection: G1/8"-F
Fitting length: 14 mm
Nominal diameter dn: 3.1 mm

SUF 20 NBR-55 SC030

Part no..:10.01.01.13947

Size: 20
Suction cup material: Nitrile rubber NBR
Material hardness [Shore A]: 55 Shore A