Compact ejector

SCP 30 FS VD

Part no..:10.02.02.00911

https://www.schmalz.com/10.02.02.00911

Home > Vacuum Technology for Automation > Vacuum Components > Vacuum Generators > Compact Ejectors > Compact Ejectors SCP-FS > SCP 30 FS VD

Compact ejector with integrated functions

- Nozzle diameter: 3 mm
- Suction rate (max.): 200 l/min
- Air consumption suction: 420 l/min
- Pressure range (operating pressure): 5.0 ... 6.0 bar
- Control valve: External control
- Function: digital vacuum switch

Design Data

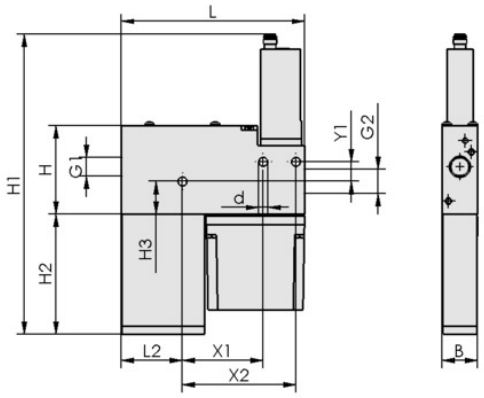

Attribute	Value
B	22 mm
d	5.50 mm
G1	G1/4"-F
G2	G3/8"-F
H	54 mm
H1	252 mm
H2	73.50 mm
H3	20.10 mm
L	112.50 mm
L2	37.50 mm
X1	49.50 mm
X2	69.50 mm
Y1	12 mm

Technical Data

Attribute	Value
Nozzle diameter	3 mm
Degree of evacuation	85 %
Suction rate (max.)	200 l/min
Control valve	External control

Contact Schmalz

Oy Schmalz Ab | Taivaltie 5, 01610 Vantaa, Finland | +358 10 2312011 | schmalz@schmalz.fi

Compact ejector

SCP 30 FS VD

Part no..:10.02.02.00911

https://www.schmalz.com/10.02.02.00911

Suction rate (max.)	7.06 cfm
Product family	SCP

Note: The supply voltage for vacuum switches and solenoid valves is 24V DC Air consumption: At optimal operating pressure Hose diameter: For max. length 2 m

Accessories

ASK B-M8-4 5000 K-4P

Part no..:10.06.02.00031

Electrical connection: Fem connect M8, 4 pol
Cable length: 5,000 mm
Material hose: PUR cable

Spare parts

FILT-EINS 50 14x49 PE-POR SCP-SMP

Part no..:10.02.02.00654

External diameter D: 13.6 mm
Length L: 48.5 mm
Filter material: Polyethylene
Construction use: Compact ejectors

Compact ejector

SCP 30 FS VD

Part no..:10.02.02.00911

https://www.schmalz.com/10.02.02.00911

SD 50.5x21x68.5 SMP/SCP25/30

Part no..:10.02.02.00652

Length L: 50.5 mm
Width B: 21 mm
Height H: 68.5 mm
Construction use: Compact ejectors SMP/SCP

Contact Schmalz
Oy Schmalz Ab | Taivaltie 5, 01610 Vantaa, Finland | +358 10 2312011 | schmalz@schmalz.fi