Flat suction cup (round)

SAF 125 NBR-45 M14x1.5-AG

Part no..:10.01.01.11486

https://www.schmalz.com/10.01.01.11486

Home > Vacuum Technology for Automation > Vacuum Components > Vacuum Suction Cups > Suction Cups for Handling Sheet Metal > Flat Suction Cups SAF > SAF 125 NBR-45 M14x1.5-AG

Flat suction cup (round) for very dynamic handling of smooth and oily workpieces

Size: 125
Suction cup material: Nitrile rubber NBR
Material hardness [Shore A]: 45 Shore A
Nipple material: Aluminum
Connection: M14x1.5-AG

Design Data

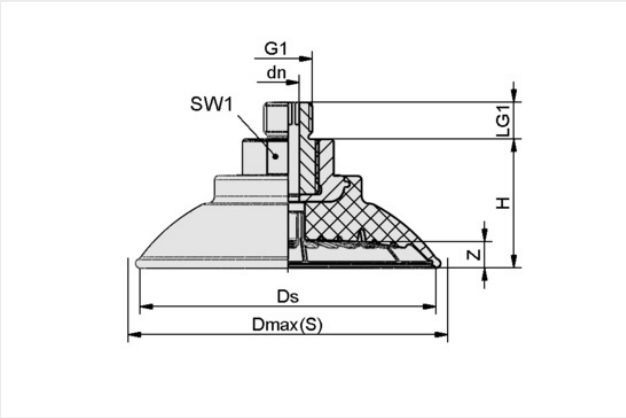

Attribute	Value
dn	6 mm
Dmax(S)	135 mm
Ds	125 mm
G1	M14x1.5-M
H	43 mm
LG1	12 mm
SW1	22 mm
Z (Stroke)	12.50 mm

Note: Acceptable dimensional tolerances for elastomer parts concerning to DIN ISO 3302-1 M3

Technical Data

Attribute	Value
Suction force (-600mbar)	660 N
Lateral force	475 N
Lateral force (oily surface)	400 N
Volume	119 cm^3
Curve radius (min) (convex)	165 mm
Hose diameter (rec.) d	9 mm
Size	125

Contact Schmalz
Schmalz S.r.l. a Socio Unico | Via Ticino 105, 28066 Galliate (NO), Italy | +39 0321 62 15 10 | schmalz@schmalz.it

Flat suction cup (round)

SAF 125 NBR-45 M14x1.5-AG

Part no..:10.01.01.11486

https://www.schmalz.com/10.01.01.11486

Suction cup material	Nitrile rubber NBR
Material hardness [Shore A]	45 Shore A
Weight	156.10 g
Number of folds	0
Product family	SAF

Note: Suction force: The specified suction forces are theoretical values at a vacuum of -0.6 bar and with a dry, smooth and flat workpiece surface - they do not include a safety factor Lateral force: The specified lateral forces are values measured at a vacuum of -0.6 bar with a dry or oily, smooth, flat workpiece surface. Depending on the workpiece surface and its quality, the actual values may deviate from these values Hose diameter: The recommended hose diameter refers to a hose length of approx. 2 m

Accessories

SU 120

Part no..:10.01.01.12437

Size: 120
Clamping range: 115.0 ... 130.0 mm
Temperature resistance: 80 °C

Contact Schmalz

Schmalz S.r.l. a Socio Unico | Via Ticino 105, 28066 Galliate (NO), Italy | +39 0321 62 15 10 | schmalz@schmalz.it