Suction cup connection nipple

SA-NIP N016 G1/8-IG DN350

Part no..:10.01.06.05731

https://www.schmalz.com/10.01.06.05731

Home > Vacuum Technology for Automation > Vacuum Components > Vacuum Suction Cups > Suction Cups for the Packaging Industry > SA-NIP N016 G1/8-IG DN350

Suction cup connection nipple

- Nipple family: N 016
- Thread G1: G1/8"-F
- Length L1: 18.5 mm
- Fitting length: 12 mm
- Nominal diameter dn: 3.5 mm
- Material: Aluminum

Design Data

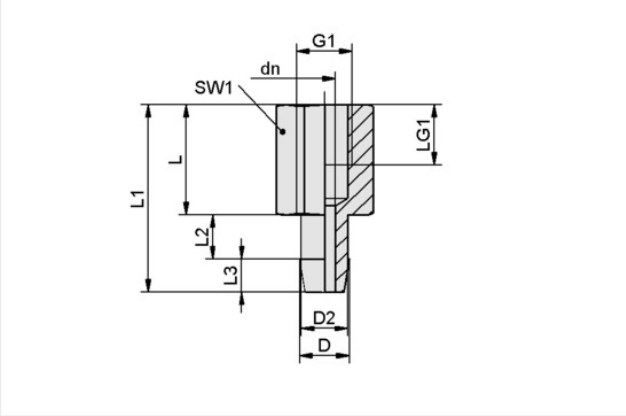

Attribute	Value
dn	3.50 mm
D	6.50 mm
D2	5.80 mm
G1	G1/8"-F
L	12 mm
L1	18.50 mm
L2	4 mm
L3	2.50 mm
LG1	8 mm
SW1	14 mm

Technical Data

Attribute	Value
Nipple family	N 016
Material	Aluminum
Weight	4.10 g

Contact Schmalz
Schmalz S.r.l. a Socio Unico | Via Ticino 105, 28066 Galliate (NO), Italy | +39 0321 62 15 10 | schmalz@schmalz.it