Suction plate (round)

SPC 210 NBR-55 G1/2-IG TV

Part no..:10.01.01.01188

https://www.schmalz.com/10.01.01.01188

Home > Vacuum Technology for Automation > Vacuum Components > Vacuum Suction Cups > Suction Cups for Handling Wood > Suction Plates SPC > SPC 210 NBR-55 G1/2-IG TV

Suction plate (round) with separation function for porous workpieces

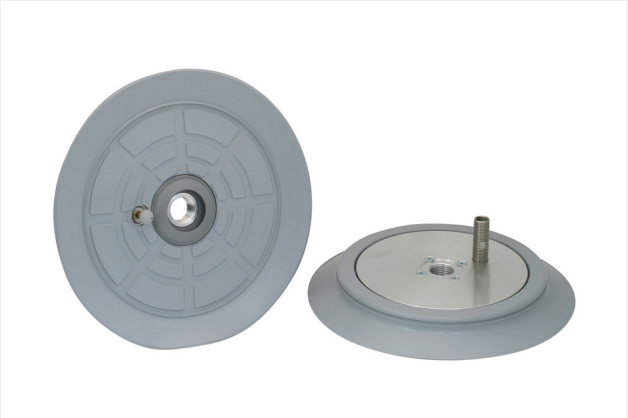

Size: 210
Suction cup material: Nitrile rubber NBR
Material hardness [Shore A]: 55 Shore A
Connection: G1/2-IG

Design Data

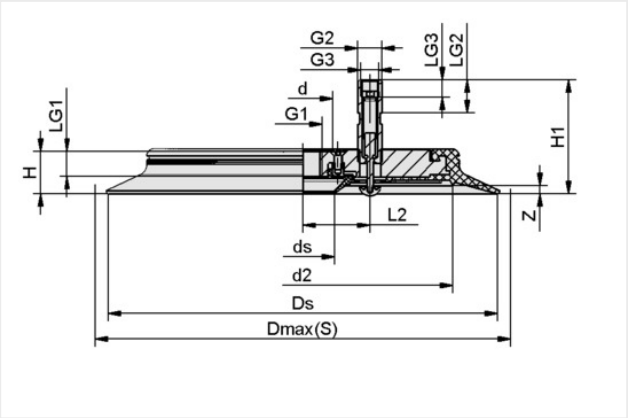

Attribute	Value
d	34 mm
d2	163 mm
ds	33.50 mm
Dmax(S)	215 mm
Ds	210 mm
G1	G1/2"-F
G2	G1/4"-M
G3	G1/8"-F
H	23 mm
H1	62 mm
L2	36.50 mm
LG1	13.50 mm
LG2	18 mm
LG3	9.50 mm
Z (Stroke)	5 mm

Note: Acceptable dimensional tolerances for elastomer parts concerning to DIN ISO 3302-1 M3

Technical Data

Attribute	Value
Suction force (-600mbar)	1760 N

Contact Schmalz
Schmalz Co. Ltd. | #503~507, 118 LS-ro 116Beon-gil, Dongan-gu, Anyang-si, Gyeonggi-do, 14118, South Korea | +82 31 876 2403
schmalz@schmalz.co.kr

Suction plate (round)

SPC 210 NBR-55 G1/2-IG TV

Part no..:10.01.01.01188

https://www.schmalz.com/10.01.01.01188

Volume	193.27 cm³
Hose diameter (rec.) d	9 mm
Size	210
Suction cup material	Nitrile rubber NBR
Material hardness [Shore A]	55 Shore A
Weight	920 g
Number of folds	0
Product family	SPC

Note: Suction force: The specified suction forces are theoretical values at a vacuum of -0.6 bar and with a dry, smooth and flat workpiece surface - they do not include a safety factor Pull-off force: The pull-off force of the versions made of natural rubber is reduced by about 40% Hose diameter: The recommended hose diameter refers to a hose length of approx. 2 m

Accessories

PC 200

Part no..:10.01.01.13089

Size: 200

TV G1/4-AG 13

Part no..:10.05.10.00061

Thread G1: G1/4"-M
Thread G2: G1/8"-F
Spring stroke Z: 13 mm

Contact Schmalz

Schmalz Co. Ltd. | #503~507, 118 LS-ro 116Beon-gil, Dongan-gu, Anyang-si, Gyeonggi-do, 14118, South Korea | +82 31 876 2423

schmalz@schmalz.co.kr

Suction plate (round)

SPC 210 NBR-55 G1/2-IG TV

Part no..:10.01.01.01188

https://www.schmalz.com/10.01.01.01188

Spare parts

DR-SPC 33 HNBR-65

Part no..:10.01.01.11371

Size: 33
Suction cup material: Hydr. nitril rubber HNBR
Material hardness [Shore A]: 65 Shore A
Height H: 16.5 mm

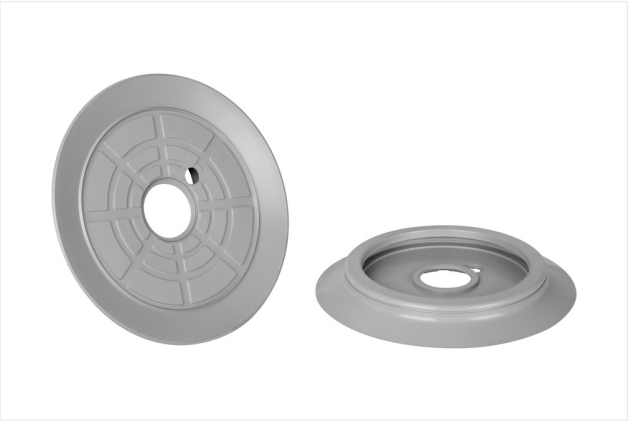

DR-SPC 210 NBR-55

Part no..:10.01.01.01191

Size: 210
Suction cup material: Nitrile rubber NBR
Material hardness [Shore A]: 55 Shore A
Height H: 24.5 mm

Contact Schmalz

Schmalz Co. Ltd. | #503~507, 118 LS-ro 116Beon-gil, Dongan-gu, Anyang-si, Gyeonggi-do, 14118, South Korea | +82 31 816 2433

schmalz@schmalz.co.kr