Plug union, T

STV-T M5-AG 4

Part no..:10.09.02.00038

https://www.schmalz.com/10.09.02.00038

Home > Vacuum Technology for Automation > Vacuum Components > Filters and Connections > Hoses and Connections > Screw in Push Fittings > STV-T M5-AG 4

Push-in Fitting, T

Thread G1: M5-M
Hose diameter: 4 mm
Material: Brass
Operating temperature: °C
Length L: 34 mm

Design Data

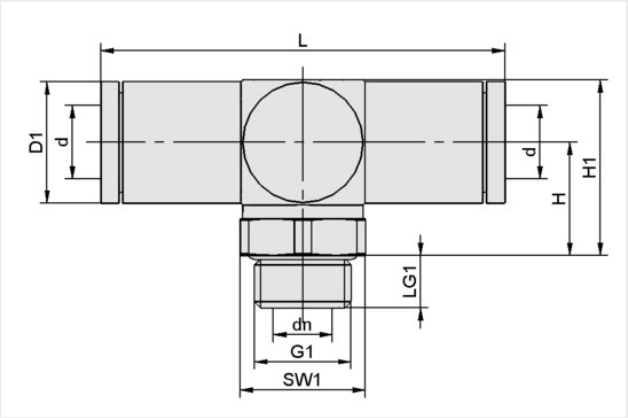

Attribute	Value
d	4 mm
G1	M5-M
dn	2 mm
D1	8.70 mm
H	9.60 mm
H1	14 mm
L	34 mm
LG1	4.50 mm
SW1	8 mm

Technical Data

Attribute	Value
Hose type	Hose D = 4 d = 2
Hose type	4-2
Material	Brass
Pressure range (operating pressure)	bar
Operating temperature	°C
Weight	14.20 g
Product family	STV

Contact Schmalz
Schmalz Co. Ltd. | #503~507, 118 LS-ro 116Beon-gil, Dongan-gu, Anyang-si, Gyeonggi-do, 14118, South Korea | +82 31 876 2403
schmalz@schmalz.co.kr

Plug union, T

STV-T M5-AG 4

Part no..:10.09.02.00038

https://www.schmalz.com/10.09.02.00038

Accessories

VSL 4-2 PE BL

Part no..:10.07.09.00013

External diameter D: 4 mm
Internal diameter d: 2 mm
Length max.: 100 m
Material hose: PE
Pressure range (operating pressure): bar
Operating temperature: °C

VSL 4-2 PU MI-TR

Part no..:10.07.09.00001

External diameter D: 4 mm
Internal diameter d: 2 mm
Length max.: 50 m
Material hose: PU
Bending radius min.: 20 mm
Pressure range (operating pressure): -0.95 ... 10.00 bar
Operating temperature: -40 ... 60 °C

VSL 4-2.7 PA MI-TR

Part no..:10.07.09.00063

External diameter D: 4 mm
Internal diameter d: 2.7 mm
Length max.: 50 m
Material hose: PA
Bending radius min.: 30 mm
Pressure range (operating pressure): -0.95 ... 20.00 bar
Operating temperature: -40 ... 90 °C

Contact Schmalz

Schmalz Co. Ltd. | #503~507, 118 LS-ro 116Beon-gil, Dongan-gu, Anyang-si, Gyeonggi-do, 14118, South Korea | +82 31 876 2423

schmalz@schmalz.co.kr