Filter with mounting kit

FAS 80x32 G1-1/4-AG EMVP-25+50

Part no..:10.05.01.00064

https://www.schmalz.com/10.05.01.00064

Filter with mounting kit

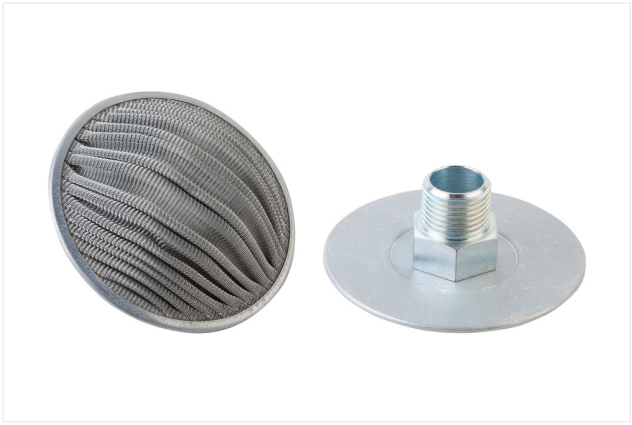

- External diameter D: 80 mm
- Length L: 32 mm
- Thread G1: G1-1/4"-M
- Construction use: Solenoid valve
- Size: 25+50

Design Data

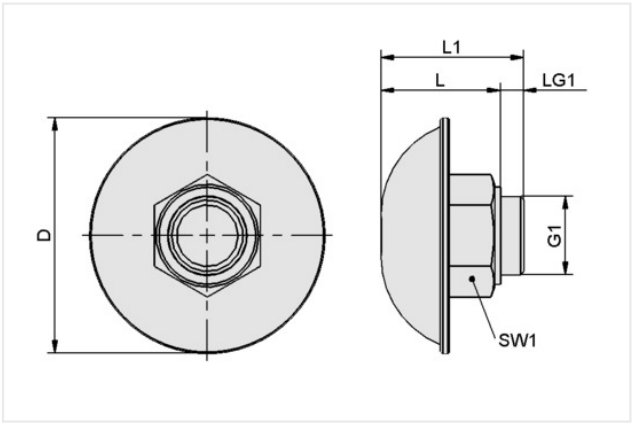

Attribute	Value
D	80 mm
G1	G1-1/4"-M
LG1	19.50 mm
L	32 mm
L1	50 mm
SW1	46 mm

Contact Schmalz
Schmalz S. de R.L. de C.V. | 1er. retorno universitario # 1 Interior 2 A, Terra Business Park, Col. La Pradera, El Marqués, Querétaro, C.P. 76269, México | + 52 442 209 52
schmalz@schmalz.com.mx