Flat suction cup (round)

SGP 20 FPM-65 N016

Part no..:10.01.01.12909

https://www.schmalz.com/10.01.01.12909

Home > Vacuum Technology for Automation > Vacuum Components > Vacuum Suction Cups > Suction Cups for Plastic Films and Paper > SGP 20 FPM-65 N016

Flat suction cup (round) for careful gripping of paper, plastic film, etc.

Size: 20
Suction cup material: Fluorocaotchuc FPM
Material hardness [Shore A]: 65 Shore A

Design Data

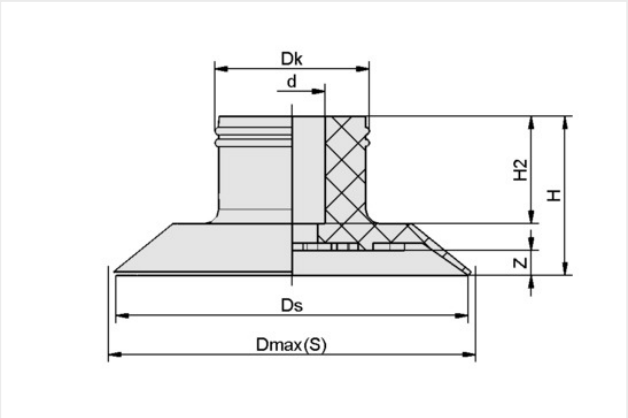

Attribute	Value
d	4.50 mm
Dk	11 mm
Dmax(S)	22 mm
Ds	20 mm
H	10.40 mm
H2	7.10 mm
Z (Stroke)	1.50 mm

Note: Acceptable dimensional tolerances for elastomer parts concerning to DIN ISO 3302-1 M3

Technical Data

Attribute	Value
Suction force (-600mbar)	8.50 N
Volume	0.60 cm^3
Size	20
Nipple family	N 016
Number of folds	0
Suction cup material	Fluorocaotchuc FPM
Material hardness [Shore A]	65 Shore A

Contact Schmalz
Schmalz B.V. | Generatorstraat 34, 7556 RC Hengelo, Netherlands | +31 74 255 5757 | info@schmalz.nl

Flat suction cup (round)

SGP 20 FPM-65 N016

Part no..:10.01.01.12909

https://www.schmalz.com/10.01.01.12909

Weight	1.50 g
Product family	SGP

Contact Schmalz
Schmalz B.V. | Generatorstraat 34, 7556 RC Hengelo, Netherlands | +31 74 255 5757 |
info@schmalz.nl