# Flat suction cup (oval)

SAOF 60x23 NBR-60 G1/4-AG

Part no..:10.01.05.00376

https://www.schmalz.com/10.01.05.00376

Home > Vacuum Technology for Automation > Vacuum Components > Vacuum Suction Cups > Suction Cups for Handling Sheet Metal > Flat Suction Cups SAOF (Oval) > SAOF 60x23 NBR-60 G1/4-AG

## Flat suction cup (oval) for very dynamic handling of smooth and oily workpieces

| |
|---|
| Dimensions (LxB): 60x23 |
| Suction cup material: Nitrile rubber NBR |
| Material hardness [Shore A]: 60 Shore A |
| Nipple material: Aluminum |
| Connection: G1/4-AG |

## Design Data

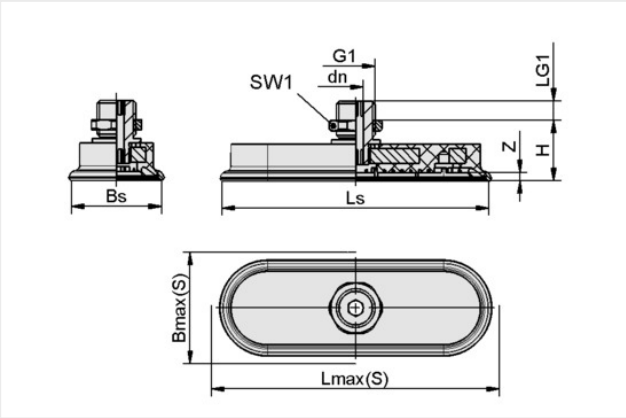


| Attribute | Value |
|---|---|
| Bmax(S) | 25 mm |
| Bs | 21.60 mm |
| dn | 5 mm |
| G1 | G1/4"-M |
| H | 18 mm |
| LG1 | 8 mm |
| Lmax(S) | 64 mm |
| Ls | 60.60 mm |
| SW1 | 17 mm |
| Z (Stroke) | 3 mm |

Note: Acceptable dimensional tolerances for elastomer parts concerning to DIN ISO 3302-1 M3

## Technical Data

| Attribute | Value |
|---|---|
| Suction force (-600mbar) | 57 N |
| Lateral force | 37 N |
| Lateral force (oily surface) | 33 N |
| Volume | 3.89 $cm^3$ |
| Curve radius (min) (convex) | 20 mm |
| Hose diameter (rec.) d | 4 mm |
| Number of folds | 0 |

Contact Schmalz
Schmalz B.V. | Generatorstraat 34, 7556 RC Hengelo, Netherlands | +31 74 255 5757 |
info@schmalz.nl

# Flat suction cup (oval)

SAOF 60x23 NBR-60 G1/4-AG

Part no..:10.01.05.00376

https://www.schmalz.com/10.01.05.00376

| | |
|---|---|
| Suction cup material | Nitrile rubber NBR |
| Material hardness [Shore A] | 60 Shore A |
| Weight | 21 g |
| Product family | SAOF |
| Dimensions (LxB) | 60x23 |

Note: Suction force: The specified suction forces are theoretical values at a vacuum of -0.6 bar and with a dry, smooth and flat workpiece surface - they do not include a safety factor Lateral force: The specified lateral forces are values measured at a vacuum of -0.6 bar with a dry or oily, smooth, flat workpiece surface. Depending on the workpiece surface and its quality, the actual values may deviate from these values Hose diameter: The recommended hose diameter refers to a hose length of approx. 2 m

Contact Schmalz
Schmalz B.V. | Generatorstraat 34, 7556 RC Hengelo, Netherlands | +31 74 255 5757 |
info@schmalz.nl