Holder tooling suction Cup

HT-SG A3 22 NPT1/4-AG

Part no..:10.07.06.00446

https://www.schmalz.com/10.07.06.00446

Home > Vacuum Technology for Automation > Vacuum Components > Mounting Elements > Holder System for Tooling HT > Holders for Suction Cups HT-SG > HT-SG A3 22 NPT1/4-AG

Holder for suction cup

Connection 1: Ball head 28.5 mm
Width B: 22 mm
Vacuum connection: G1/4"-F
Suction cup connection: NPT1/4-M

Design Data

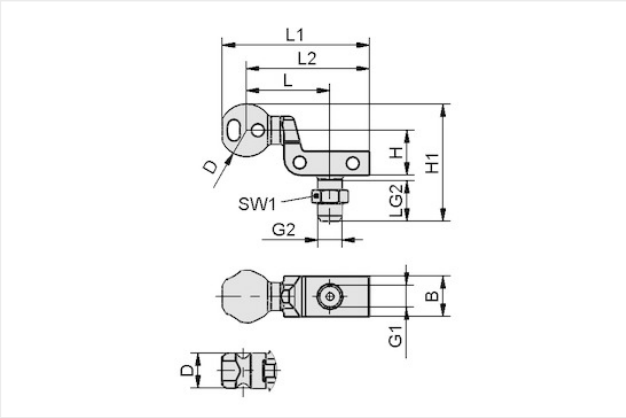

Attribute	Value
B	22 mm
D	28.50 mm
G1	G1/4"-F
G2	NPT1/4-M
H	24.50 mm
H1	56.80 mm
L	45.50 mm
L1	80 mm
L2	67 mm
LG2	15 mm

Technical Data

Attribute	Value
Weight	69.50 g
Product family	HT-SG

Contact Schmalz
J. Schmalz GmbH | Johannes-Schmalz-Str.1, 72293 Glatten, Germany | +49 7443 2403-102 | customercenter@schmalz.de