Flat suction cup (round)

SG 10 SI-55 N025

Part no..:10.01.01.00601

https://www.schmalz.com/10.01.01.00601

Home > Vacuum Technology for Automation > Vacuum Components > Vacuum Suction Cups > Suction Cups for Different Industries > SG 10 SI-55 N025

Flat suction cup (round)

Size: 10
Suction cup material: Silicone SI
Material hardness [Shore A]: 55 Shore A
Height H: 13.5 mm

Design Data

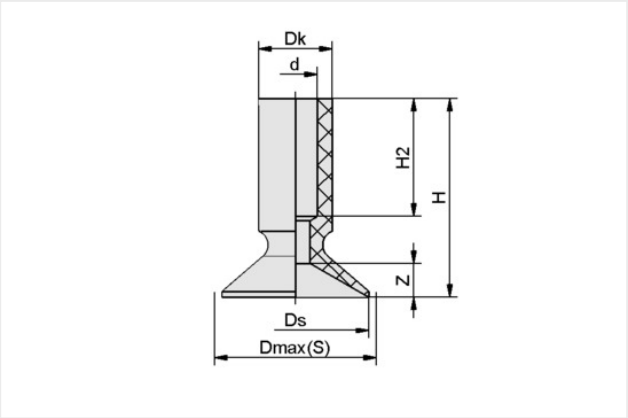

Attribute	Value
d	3 mm
Dk	5 mm
Dmax(S)	11 mm
Ds	10 mm
H	13.50 mm
H2	8 mm
Z (Stroke)	2 mm

Note: Acceptable dimensional tolerances for elastomer parts concerning to DIN ISO 3302-1 M3

Technical Data

Attribute	Value
Number of folds	0
Size	10
Suction cup material	Silicone SI
Suction force (-600mbar)	4 N
Material hardness [Shore A]	55 Shore A
Product family	SG

Contact Schmalz
J. Schmalz GmbH | Johannes-Schmalz-Str.1, 72293 Glatten, Germany | +49 7443 2403-102 | customercenter@schmalz.de

Accessories

SA-NIP N025 M5-AG DN200

Part no..:10.01.01.00318

Thread G1: M5-M
Fitting length: 3 mm
Material: Aluminum