Flat suction cup (round) sensitive

SGN 10 SI-55 M5-AG

Part no..:10.01.01.10037

https://www.schmalz.com/10.01.01.10037

Home > Vacuum Technology for Automation > Vacuum Components > Vacuum Suction Cups > Suction Cups for Different Industries > Flat Suction Cups SGN > SGN 10 SI-55 M5-AG

Flat suction cup (round), handling sensitive workpieces with uneven surfaces

- Size: 10
- Suction cup material: Silicone SI
- Material hardness [Shore A]: 55 Shore A
- Nipple material: Aluminum
- Connection: M5-AG
- Material characteristics: FDA-compatible

Design Data

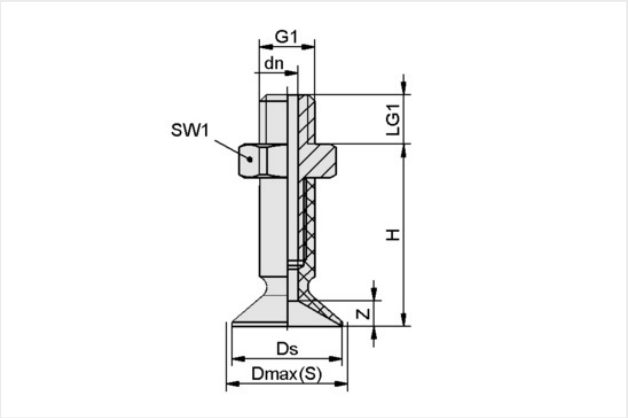

Attribute	Value
Dmax(S)	11 mm
dn	2 mm
Ds	10 mm
G1	M5-M
H	16 mm
LG1	4.50 mm
SW1	8 mm
Z (Stroke)	2 mm

Note: Acceptable dimensional tolerances for elastomer parts concerning to DIN ISO 3302-1 M3

Technical Data

Attribute	Value
Number of folds	0
Size	10
Suction cup material	Silicone SI
Suction force (-600mbar)	4 N
Material hardness [Shore A]	55 Shore A

Note: Suction force: The specified suction forces are theoretical values at a vacuum of -0.6 bar and with a dry, smooth and flat workpiece surface - they do not include a safety factor Hose diameter: The recommended hose diameter refers to a hose length of approx. 2 m

Contact Schmalz
J. Schmalz GmbH | Johannes-Schmalz-Str.1, 72293 Glatten, Germany | +49 7443 2403-102 | customercenter@schmalz.de

Flat suction cup (round) sensitive

SGN 10 SI-55 M5-AG

Part no..:10.01.01.10037

https://www.schmalz.com/10.01.01.10037

Spare parts

SA-NIP N025 M5-AG DN200

Part no..:10.01.01.00318

Thread G1: M5-M
Fitting length: 3 mm
Material: Aluminum

SG 10 SI-55 N025

Part no..:10.01.01.00601

Size: 10
Suction cup material: Silicone SI
Material hardness [Shore A]: 55 Shore A
Height H: 13.5 mm

Contact Schmalz
J. Schmalz GmbH | Johannes-Schmalz-Str.1, 72293 Glatten, Germany | +49 7443 2403-102 | customercenter@schmalz.de